1. General Description

BCM8808N3ZR device is a LCD panel driver IC with NAND Flash and SDRAM memory interface. BCM8808N3ZR reads image data stored in NAND Flash and drivers LCD panel with MIPI/LVDS/RGB/MCU interface. And it can also generating Color Bar and Gray Scale patterns. With BCM8808N3ZR user can easily build customized LCD panel testing module.

2. Features

- Display Resolution: up to 1920*1200, 24bpp, 60Hz
- Support up to 24bpp(RGB888)
- Color Bar patterns generator
- Gray Scale patterns generator
- Support dynamically set LCD panel parameters
- LCD Panel Interface:
  - MIPI DSI interface(with Solomon SSD2828), support up to 4 data lanes
  - 7:1 LVDS interface(with THine THC63LVDM83R), support up to 4 data channels
  - RGB Interface
  - MCU interface
- NAND Flash: support up to 1Gbit for image storage
- SDRAM Memory: support up to 8M*16bit as frame buffer
- PC software for setting LCD panel parameters
- Provide DLL(Dynamic Link Library) for secondary development

3. Package and Order Information

Ordering Part Number	Package
BCM8808N3ZR	LQFP144, 22x22mm, 0.5mm pitch

4. Block Diagram

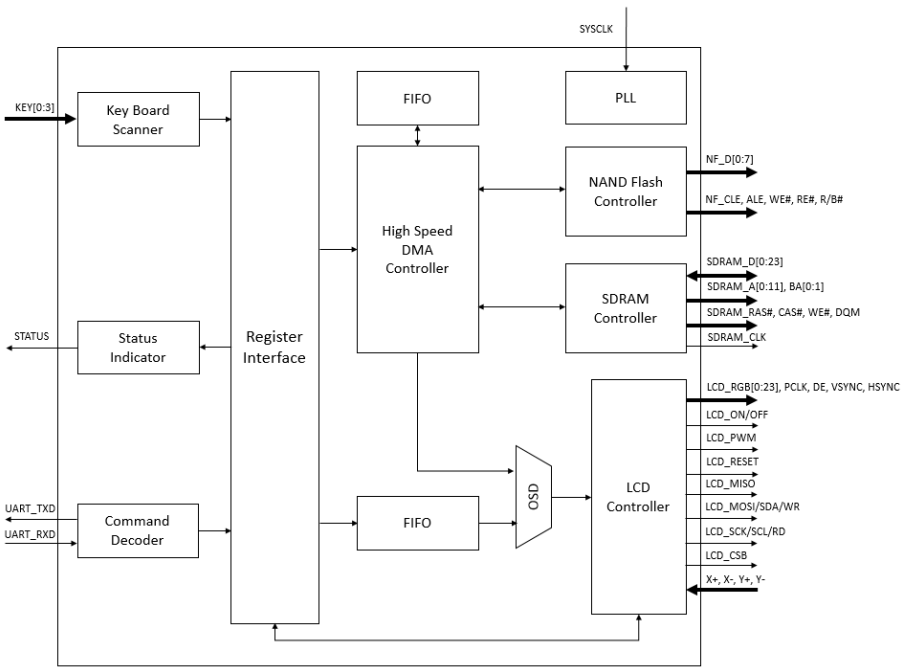

5. Function Description

Command Decoder

Allow user to set LCD panel parameters with UART interface, for example, HSYNC front/back porch, VSYNC front/back porch, display resolution, gamma and other parameters.

Status Indicator

After connecting “STATUS” pin to LED, user can simply observe device working status by different blinking mode.

Keyboard Scanner

Allow user to switch image / display mode by press key button. There’re three display modes supported by BCM8808N3ZR: “Image display”, “Color bar patterns display” and “Gray scale patterns display”.

LCD Controller

For LCD Panel initialization, generating LCD timing, controlling LCD backlight with PWM. And also support touch panel by detecting signal X+, X-, Y+, Y-.

High Speed DMA Controller

High Speed DMA Controller is actually a system controller to communicate with “Register Interface”, “FIFO”, “SDRAM controller”, “NAND Flash Controller”, “OSD” module.

NAND Flash Controller

NAND Flash is used to store image data and also save LCD parameters.

SDRAM Controller

This module is for accessing SDRAM memory as frame buffer.

OSD module

Responsible for On Screen Display, support both character and image OSD.

6. Signal Description

Pin No.	Signal Name	I/O	Description
42	UART_TXD	O	UART TXD for user commands
43	UART_RXD	I	UART RXD for user commands
40	STATUS	O	By blinking LED, user can observe device working status
143, 140, 139, 138, 136, 134, 133, 132	LCD_R[0:7]	O	LCD RED
131, 130,	LCD_G[0:7]	O	LCD GREEN

129, 127, 126, 125, 124, 123			
121, 120, 119, 118, 117, 115, 114, 113	LCD_B[0:7]	O	LCD BLUE
144	LCD_POWER	O	Switch LCD on/off
50	LCD_VSYNC	O	LCD VSYNC
51	LCD_HSYNC	O	LCD HSYNC
53	LCD_PCLK	O	LCD pixel clock
54	LCD_DE	O	LCD data enable
56	LCD_MISO	O	SPI interface MISO(Master In Slave Out)
57	LCD_CSB	O	SPI interface Chip Select
58	LCD_MOSI/SDA/WR	O	SPI interface: MOSI(Master Out Slave In) I2C interface: SDA MCU mode: WR
59	LCD_SCK/SCL/RD	O	SPI interface: SCK I2C interface: SCL MCU mode: RD
60	LCD_RESET	O	LCD Reset signal, Low active
61	LCD_PWM	O	LCD backlight PWM
63	LCD_X-	I	Touch Panel X-
65	LCD_X+	I	Touch Panel X+
67	LCD_Y-	I	Touch Panel Y-
68	LCD_Y+	I	Touch Panel Y+
45, 46, 48, 49	Key[0:3]	I	Key Button input, High active
81, 83, 84, 87, 88, 91, 92, 93, 100, 101, 102, 103, 105, 106, 107, 108	SDRAM_D[0:15]	I/O	SDRAM Data Bus
31, 29, 28, 27, 26, 25, 22, 21, 20, 19, 32, 18	SDRAM_A[0:11]	O	SDRAM Address Bus
99	SDRAM_RAS#	O	SDRAM RAS#
98	SDRAM_CAS#	O	SDRAM CAS#
96	SDRAM_WE#	O	SDRAM WE#
95	SDRAM_DQM	O	SDRAM DQM
17	SDRAM_CLK	O	SDRAM CLK
34, 33	SDRAM_BA[0:1]	O	SDRAM BA[0:1]

3, 4, 5, 6, 7, 8, 9, 10	NF_DATA[0:7]	I/O	NAND Flash data bus
16	NF_WE#	O	NAND Flash WE#
15	NF_ALE	O	NAND Flash ALE
14	NF_CLE	O	NAND Flash CLE
11	NF_R/B#	O	NAND Flash R/B#
13	NF_RE#	O	NAND Flash RE#
71	XIN	I	External crystal input.
72	XOUT	O	Output to crystal
1, 23, 36, 41, 52, 64, 82, 89, 104, 111, 116, 128, 141	VCC_IO	P	IO Power
12, 30, 44, 86, 94, 137	VCC_INT	P	Core Power
73	VCC_PLL	P	PLL Power
2, 24, 35, 39, 47, 55, 85, 90, 97, 112, 122, 135, 142	GND	P	Ground

7. Recommended Operating Conditions

Symbol	Parameter	Min.	Std.	Max.	Units
VCC_INT	Core Supply Voltage	1.0	1.1	1.2	V
VCC_IO	I/O Driver Supply Voltage	2.97	3.3	3.63	V
VCC_PLL	PLL Supply Voltage	1.0	1.1	1.2	V
TJ	Junction temperature	-40	25	85	° C

8. Package Diagrams

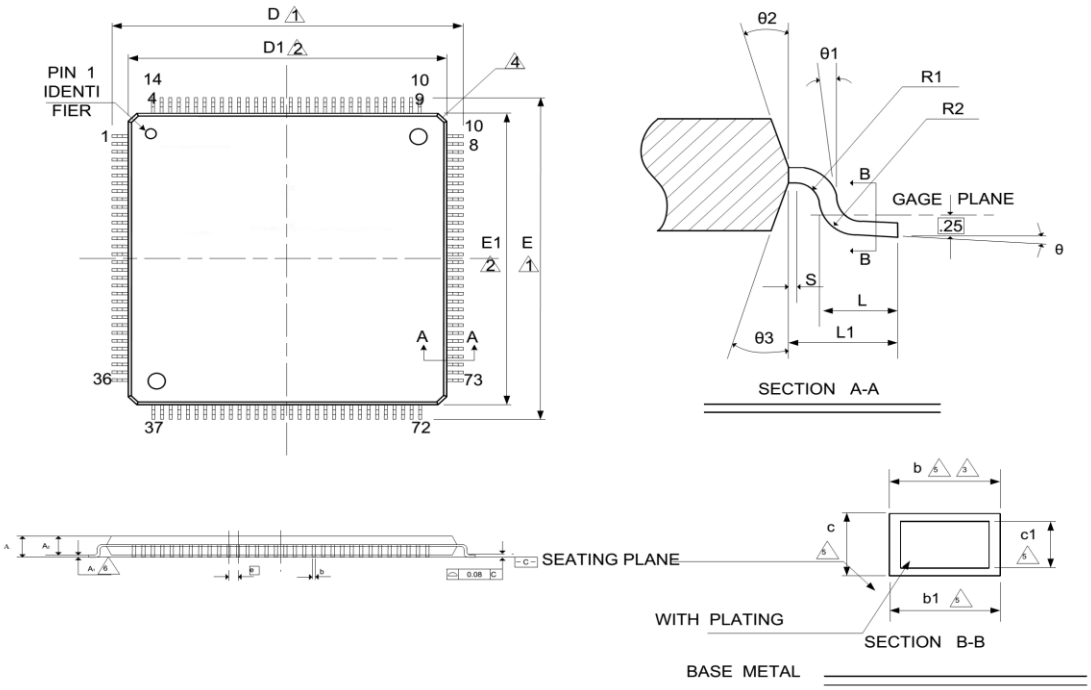

Symbol	Dimension in mm			Dimension in inch		
	Min	Nom	Max	Min	Nom	Max
A	—	—	1.60	—	—	0.063
A1	0.05	—	—	0.002	—	—
A2	1.35	1.40	1.45	0.053	0.055	0.057
b	0.17	0.22	0.27	0.007	0.009	0.011
b1	0.20 REF			0.008 REF		
c	0.12	—	0.20	0.005	—	0.008
c1	0.13 REF			0.005 REF		
D	21.85	22.00	22.15	0.860	0.866	0.872
D1	19.90	20.00	20.10	0.783	0.787	0.791
E	21.85	22.00	22.15	0.860	0.866	0.872
E1	19.90	20.00	20.10	0.783	0.787	0.791
e	0.50 BSC			0.020 BSC		
L	0.45	0.60	0.75	0.018	0.024	0.030
L1	1.00 REF			0.039 REF		
R	0.15 REF			0.006 REF		
R1	0.15 REF			0.006 REF		
S	0.19 REF			0.007 REF		
θ	0°	3.5°	7°	0°	3.5°	7°
θ1	7° REF			7° REF		
θ2	12° REF			12° REF		
θ3	12° REF			12° REF		

1. TO BE DETERMINED AT SEATING PLANE -C-
2. DIMENSION D1 AND E1 DO NOT INCLUDE MOLD PROTRUSION D1 AND E1 ARE MAXIMUM PLASTIC BODY SIZE DIMENSION INCLUDING MOLD MISMATCH.
3. DIMENSION b DOES NOT INCLUDE DAMBAR PROTRUSION DAMBAR CAN NOT BE LOCATED ON THE LOWER RADIUS OR THE FOOT.
4. EXACT SHAPE OF EACH CORNER IS OPTIONAL.
5. THESE DIMENSIONS APPLY TO THE FLAT SECTION OF THE LE BETWEEN 0.10 mm AND 0.25 mm FROM THE LEAD TIP.
6. A1 IS DEFINED AS THE DISTANCE FROM THE SEATING PLANE
7. CONTROLLING DIMENSION : MILLIMETER. TO THE LOWEST POINT OF THE PACKAGE BODY.
8. REFERENCE DOCUMENT : JEDEC MS－026 , BFB

9. Revision History

Date	Version	Section	Change Summary
Feb. 2013	1.0	-	Initial release